AUVIDEA
X221, -LC, -AI
TECHNICAL REFERENCE MANUAL

SCOPE OF WORK
Providing technical information and documentation for the X221, -LC, -AI carrier boards for the AGX Xavier

REPORT NUMBER
38413

ISSUE DATE	**[REVISED DATE]**
16.NOV.2021	[FEB.2021]

Version
1.4

PAGES
38

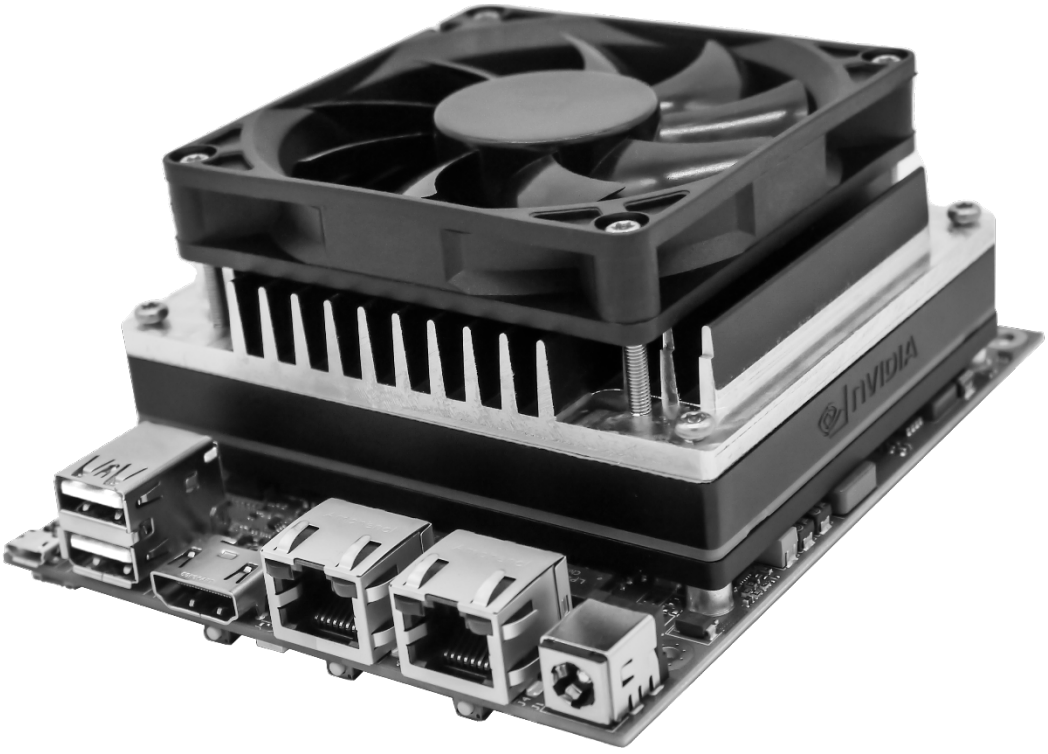

CONTENTS

SECTION 1 Document revisions and changes

Document version	Changes
1.0	Initial document, internal verification process
1.1	Internal verification process
1.2	Restructuring of document, added Appendix B, C
1.3	Adding Socket Pins
1.4	Adding Appendix E and fixed missing table in Appendix B

SECTION 2 Product revisions and changes

Product version	Changes
38413-2	Crypto chip
38413-4	Safety MCU, Change of Ethernet controllers, MCU UART to LTE, CAN RX/TX

SECTION 3 Overview

3.1 Model comparison

Description	X221-LC (Rev 2)	X221-AI (Rev 2)	X221 (Rev 4)	X221-AI (Rev 4)
2x GbE (RJ45)	1x native, 1x i210 PCIe to GbE	1x native, 1x i210 PCIe to GbE	2x RTL8111 PCIe to GbE	2x RTL8111 PCIe to GbE
HDMI out	1x	1x	1x	1x
USB 2.0	1x micro	4x	1x micro	4x
USB 3.0	2x	2x	2x	2x
LM823 Wifi	-	2x (optional)	-	2x (optional)
Safety MCU (for JAXi)	-	-	-	yes
Basic MCU	yes	yes	yes	-
Remote power control & debug via LTE	-	-	-	yes
MicroSD/UFS card slot	-	1x	-	1x
UART	1x	2x	1x	3x
I2S	-	2x	-	2x
I2C	1x	2x	1x	2x
Extension port for PCIe x4/x1/USB/UART/I2C/GPIO	-	yes	-	yes
Extension port for CSI-2	-	4-8x (optional)	-	4-8x (optional)
Operating Voltage	12V	12-48V	12V	12-48V
Jetson power modes	30W + MAXN	30W	30W + MAXN	30W
Super Cap UPS	-	(optional)	-	(optional)
Power out (5V, 12V)	-	yes	-	yes
Power/Reset/Force-Recovery Buttons	-	yes	-	yes
RTC super cap	200mF	200mF	200mF	200mF
Auto flashing	yes	yes	yes	yes
CAN (RX/TX only)	1x	1x	1x	1x
CAN	-	1x	-	1x
Debug port	-	-	yes	yes
Fan connector (5V, PWM)	1x	1x	1x	1x
RGB LED (GPIO controlled)	-	1x	-	1x
Revers voltage protection (low voltage drop MOSFET)	yes	yes	yes	yes
Overvoltage protection	yes	yes	yes	yes
Rechargeable lithium cell (MS621FE)	(optional)	(optional)	(optional)	(optional)
Crypto authentication chip	-	-	yes	Yes

3.2 Technical specification

Description		Note
HDMI	2.0, 4k60p	
USB 3.1	10Gb/s	
Physical size	125mm x 104.6mm	3D STP model available
Mounting holes	4x M3	
Temperature range	-25°C to +80°C	Cold temperature monitoring with MCU optional
Humidity	Noncondensing humidity	
Longevity	No temperature sensitive electrolytic capacitors	

3.3 Model pictures

	Top side	Bottom side
X221 (Rev 4)	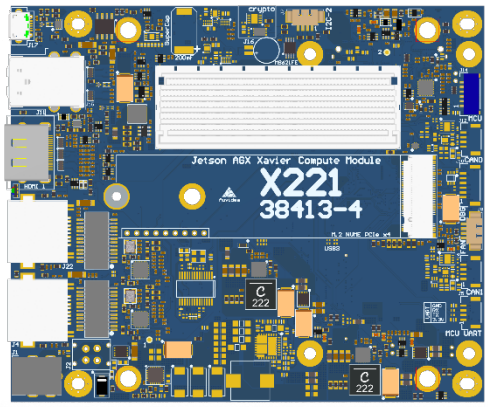	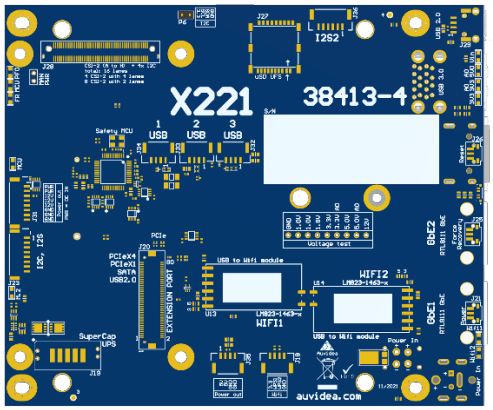
X221-AI (Rev 4)	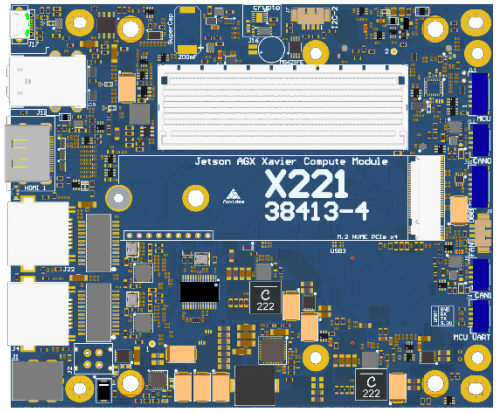	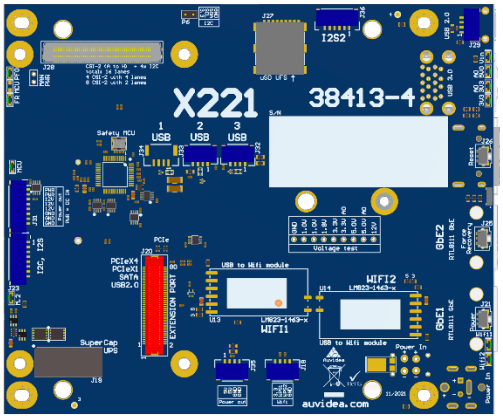
	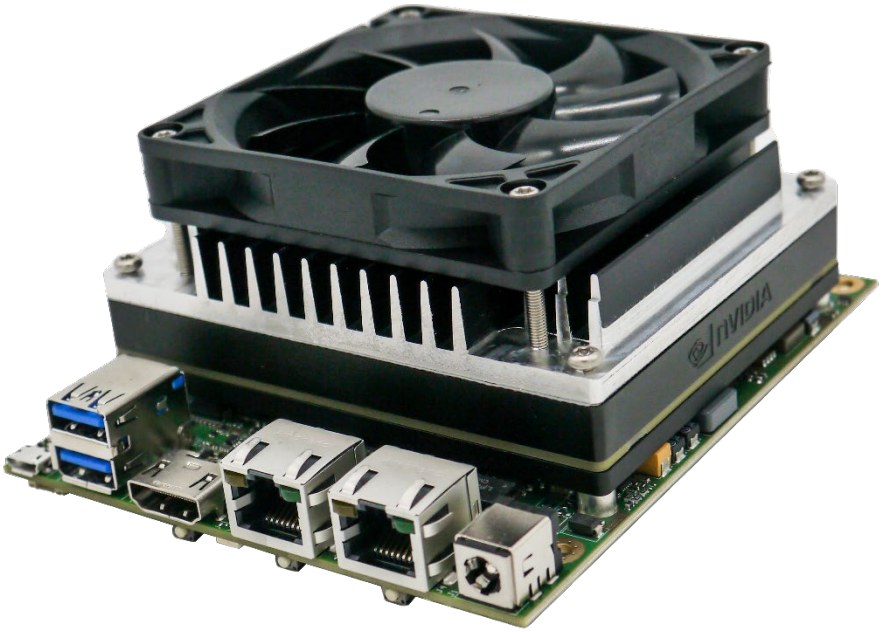 The picture shows a prototype custom heatsink, designed for the AGX Xavier. It is designed to mount a standard 80x80mm fan.	

3.4 Power consumption

Description	X221-LC (Rev 2)	X221-AI (Rev 2)	X221 (Rev 4)	X221-AI (Rev 4)
Carrier board logic	1-2W	1-2W	1-2W	1-2W
1.8/3.3/5V power converter efficiency	>90%	>90%	>90%	>90%
Power in converter efficiency	-	>90%	-	>90%

If you intend to use MAXN mode, the LC version is better suited because it does not have a power limiting input converter. The full version features high voltage power in converter with an output of 12V 5A, so that a maximum power setting of 30W is recommended.
It is possible to bypass the power input converter by moving two 0805 beads as seen in the picture below. With this patch the input voltage is limited to 12V as the power input converter is bypassed.

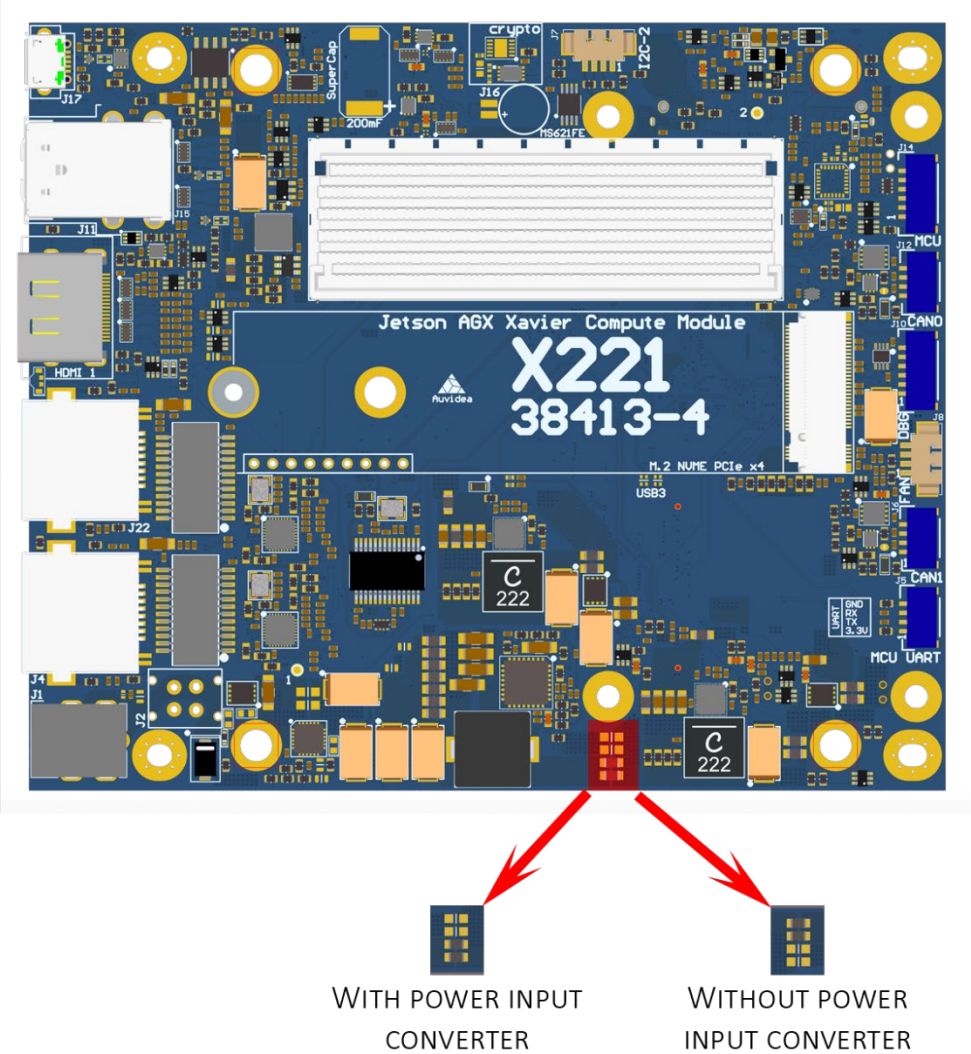

SECTION 4 Features

4.1 Crypto authentication chip

Pin	Description
Model	ATSHA204A-MAHCZ-T
Datasheet	https://ww1.microchip.com/downloads/en/DeviceDoc/ATSHA204A-Data-Sheet-40002025A.pdf

The crypto chip can used for authentication, software licensing and copy protection.

4.2 Safety MCU

4.2.1 Features

- Ability to control power management of carrier board and AGX Xavier
- Select boot chain (GPIO)
- Retrieve internal status (SPI)
- Monitor internal power rails (I2C)

For further details refer to NVIDIA documentation:
Jetson Xavier OEM product design guide (NVIDIA Jetson download center: 15.5 Safety MCU)

4.2.2 Block diagram of Safety MCU

Figure 15-5. Safety MCU Connections

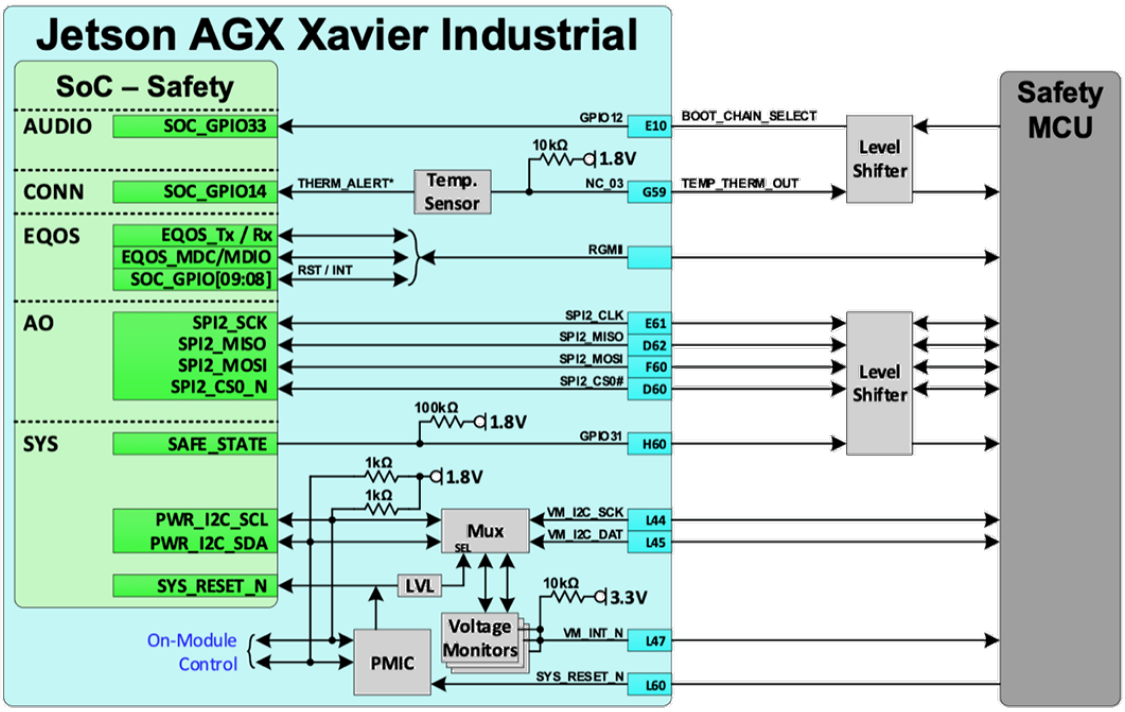

4.2.3 Schematic of Safety MCU section

Pleas check that your model has a Safety MCU. If your models does not have a safety MCU you will have the basic MCU.

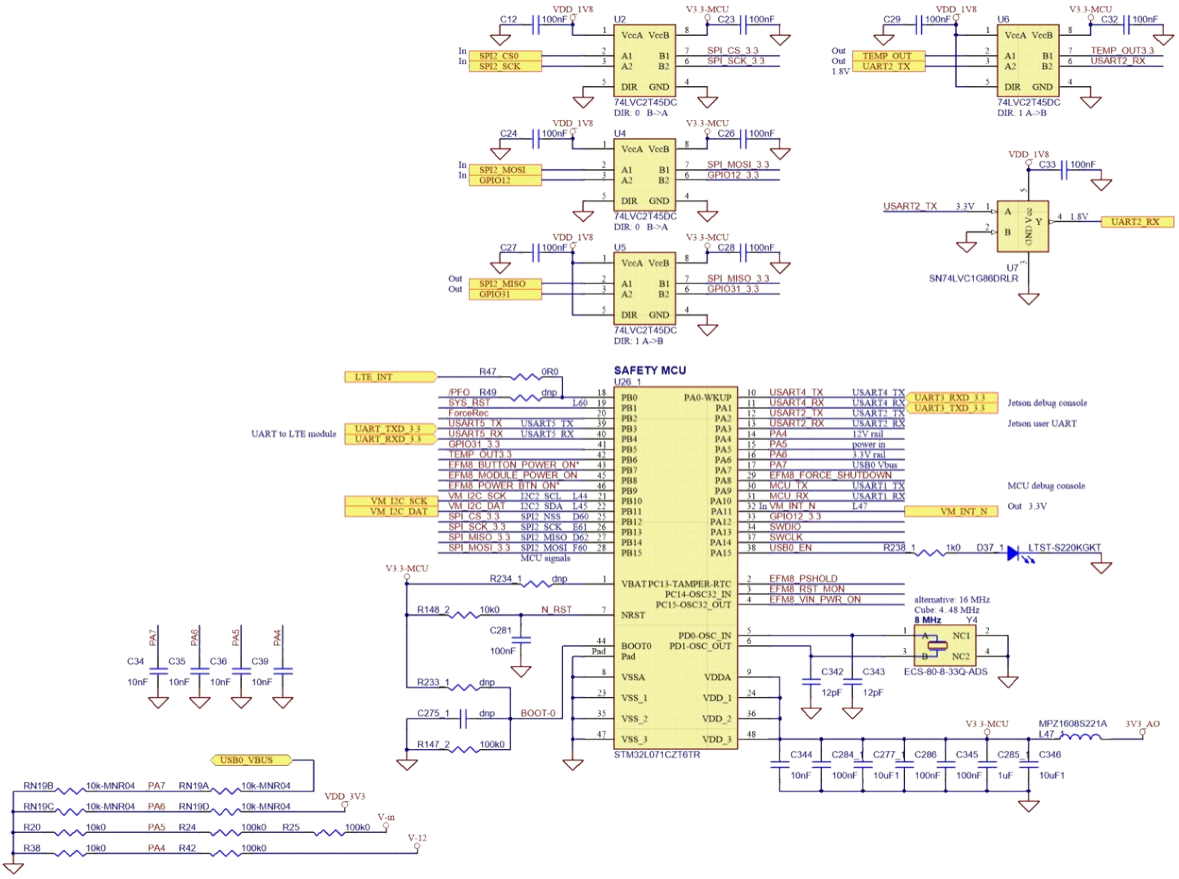

4.2.4 Pinout basic MCU

STM32L031G6U6TR

Pin	Description	Socket pin	Note
1	3V3_AO		3.3V
2	MCU_LED		5V tolerant
3	ForceRec		
4	MCU_RESET		With 3.3V pullup
5	3V3_AO		3.3V
6	EFM8_BUTTON_POWER_ON*		
7	EFM8B10_D_ONKEY_N		
8	PA6		
9	EFM8_ACOK		
10	EFM8_PSHOLD		
11	EFM8_FORCE_SHUTDOWN		
12	EFM8_RST_MON		
13	PA7		USB0_VBUS/2
14	/PFO		
15	SYS_RST		
16	GND		
17	3V3_AO		3.3V
18	3V3_AO		3.3V
19	MCU_TX		Connected to J14 pin 2
20	MCU_RX		Connected to J14 pin 3
21	SWDIO		Connected to J14 pin 5
22	SWCLK		Connected to J14 pin 4
23	USB0_EN		
24	EFM8_VIN_PWER_ON		
25	EFM8_MODULE_POWER_ON		
26	EFM8_POWER_BTN_ON*		
27	BOOT0		
28	GND		

SECTION 5 Pinout description

5.1 J2 - POWER PORT

Molex Micro Fit 3.0 (alternative power input)

5.2 J4 - Ethernet

RJ45
Standard pinout.

5.3 J5 - MCU UART

JST-GH 1.25mm

Pin	Description	Socket pin	Note
1	3.3V		
2	UART_TX	Safety MCU pin 39	3.3V, MCU user UART to connect to LTE module
3	UART_RX	Safety MCU pin 40	3.3V, MCU user UART to connect to LTE module
4	GND		

5.4 J6 - CAN1

JST-GH 1.25mm

Pin	Description	Socket pin	Note
1	5V		max 500mA (with current limiting switch)
2	CAN_H	B61	2.5V center voltage, with CAN transceiver
3	CAN_L	H61	2.5V center voltage, with CAN transceiver
4	GND		

5.5 J7 - I2C

Pico blade 1.25mm

Pin	Description	Socket pin	Note
1	3.3V		
2	SCL	J61	3.3V, open drain
3	SDA	K61	3.3V, open drain
4	GND		

5.6 J8 - FAN

Pico blade 1.25mm

Pin	Description	Socket pin	Note
1	GND		
2	12V		1A
3	TACH	E54	1.8V input 100K pull up to 1.8V, fan speed tacho
4	PWM	K62	open drain output with 10k pullup to 12V

For the use of a 5V fan there is an option to resolder a component appropriately.

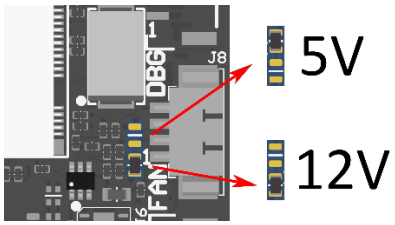

5.7 J10 - Debug

JST-GH 1.25mm

Pin	Description	Socket pin	Note
1	3.3V		
2	UART3_TX	H62	3.3V, AGX Xavier debug console transmit
3	UART3_RX	K60	3.3V, AGX Xavier debug console receive
4	GPIO13_OUT	G7	3.3V, G7 (AGX Xavier ball), output from Jetson
5	GPIO4_IN	B59	3.3V, B59 (AGX Xavier ball), input to Jetson
6	GND		

5.8 J11 - HDMI

Standard pinout, connected to DP-2

5.9 J12 - CAN0

JST-GH 1.25mm

Pin	Description	Socket pin	Note
1	5V		max 500mA (with current limiting switch)
2	CAN0_H	F58	2.5V center voltage, with CAN transceiver
3	CAN0_L	D59	2.5V center voltage, with CAN transceiver
4	GND		

5.10 J14 - MCU

JST-GH 1.25mm

Pin	Description	Socket pin	Note
1	3.3V		
2	MCU_TX		3.3V, MCU console debug port, transmit, 115200 baud, 8N1
3	MCU_RX		3.3V, MCU console debug port, receive, 115200 baud, 8N1
4	SWCLK		ST-Link programming interface of MCU
5	SWDIO		ST-Link programming interface of MCU
6	GND		

With the AI model of the X221 you have access to the safety MCU features. Pleas contact Auvidea for more information.
The basic MCU of the non AI models only handle power up functionality.

5.11 J15 - 2x USB 3.1

Standard pinout (type A).
10Gb/s.
Power can be Enabled/Disabled with GPIO22

Nexus-3815RFY

Pin	Description	Socket pin	Note
1	Vin		1A, 5V
2	USB3_D_N	G10	
3	USB3_D_P	G11	
4	GND		
5	UPHY_RX11_N	D13	
6	UPHY_RX11_P	D12	
7	GND		
8	UPHY_TX11_N	H13	
9	UPHY_TX11_P	H12	
10	Vin		1A, 5V
11	USB1_D_N	C10	
12	USB1_D_P	C11	
13	GND		
14	UPHY_RX6_N	B17	
15	UPHY_RX6_P	B16	
16	GND		
17	UPHY_TX6_N	K16	
18	UPHY_TX6_P	K17	
19	GND		
20	GND		
21	GND		
22	GND		

5.12 J17 - MICRO USB

Standard pinout.
Host and device mode supported.
Powered by power limiting switch with 500mA.

5.13 J18 – Wi-Fi

JST-GH 1.25mm

Pin	Description	Socket pin	Note
1	3.3V		
2	WPS1		Connects to pin 6 of LM823-Module 1
3	WPS2		Connects to pin 6 of LM823-Module 2
4	GND		

Prepared for LM823 3.3V modules.
Wi-Fi options can be found in the Wi-Fi Appendix.
Wi-Fi bays for modules are only supported on the AI version and will not work with the standard configuration as the necessary components are not present.
For options including LM823 modules solder on please contact Auvidea.

5.14 J19 - SUPER CAP UPS

For optional super cap addon board.
This will support a graceful power down in case of a power outage.

5.15 J20 - PCIEx4/x1/USB/UART/I2C/GPIO

DF17(3.0)-80DS-0.5V (57)
Extension connector for variety of extension boards.

Pin	Description	Socket pin	Note
1	5V		
2	5V		
3	5V		
4	5V		
5	3.3V		
6	VCC_SRC		12V
7	3.3V		
8	VCC_SRC		12V
9	1.8V		
10	VCC_SRC		12V
11	TRX-0_P	A56	SPI1_MISO
12	CAN1_STBY	B62	
13	TRX-0_N	D55	SPI1_MOSI
14	NC		
15	TRX-1_P	J57	SPI1_SCK
16	NC		

17	TRX-1_N	E55	SPI1_CS0
18	UART5_RTS	K58	3.3V
19	NC		
20	UART5_RX	H58	3.3V
21	NC		
22	UART5_TX	J58	3.3V
23	NC		
24	PEX_L0_RST_N	D10	
25	NC		
26			
27	PEX_WAKE_N	A8	
28	GND		
29	PEX_L1_RST_N	B9	
30	PEX_CLK0_N	E14	
31	I2C_SCL_GP5_3.3		
32	PEX_CLK0_P	E15	
33	I2C_SDA_GP5_3.3		
34	GND		
35	GND		
36	PEX_CLK1_N	F17	
37			
38	PEX_CLK1_P	F16	
39	LTE_INT		Connected to Safety MCU
40	GND		
41	GND		
42	UPHY_TX2_N	K20	
43	UART_RXD		3.3V, UART to LTE module (from Safety MCU)
44	UPHY_TX2 P	K21	
45	UART_TXD		3.3V, UART to LTE module (from Safety MCU)
46	GND		
47	GND		
48	UPHY_TX3_N	H21	
49	UPHY_RX2_N	B20	
50	UPHY_TX3_P	H20	
51	UPHY_RX2_P	B21	
52	GND		
53	GND		
54	UPHY_TX4_N	N19	
55	UPHY_RX3_N	D21	
56	UPHY_TX4_P	N18	
57	UPHY_RX3_P	D20	
58	GND		
59	GND		
60	UPHY_TX5_N	G18	
61	UPHY_RX0_N	A23	Standard is PCIEx1, optional USB3.0, contact Auvidea
62	UPHY_TX5_P	G19	
63	UPHY_RX0_P	A22	Standard is PCIEx1, optional USB3.0, contact Auvidea
64	GND		

65	GND		
66	UPHY_RX5_N	C18	
67	UPHY_TX0_N	J23	Standard is PCIEx1, optional USB3.0, contact Auvidea
68	UPHY_RX_P	C19	
69	UPHY_TX0_P	J22	Standard is PCIEx1, optional USB3.0, contact Auvidea
70	GND		
71	GND		
72	D2_N		
73	UPHY RX4_N	A19	
74	D2_P		
75	UPHY_RX4_P	A18	
76	NC		
77	GND		
78	NC		
79	GPIO_EXP0_INT		connected to J28 pin 74
80	NC		

5.16 J21 - POWER BUTTON

5.17 J22 - ETHERNET

Standard pinout.

5.18 J23 - I2S/I2C

JST-GH 1.25mm

Pin	Description	Socket pin	Note
1	3.3V		
2	I2S3_DIN	J59	1.8V
3	I2S3_DOUT	K59	1.8V
4	I2S3_FS	C60	1.8V
5	I2S3_SCLK	C59	1.8V
6	I2C_SCL_GP5_3.3	A53	3.3V, also connected to J28 (93)
7	I2C_SDA_GP5_3.3	C53	3.3V, also connected to J28 (95)
8	GND		GND

5.19 J25 - FORCE RECOVERY BUTTON

5.20 J26 - RESET BUTTON

5.21 J27 - MICRO SD-CARD/UFS SLOT

Standard pinout

5.22 J28 - CSI-2

LSHM-150-02.5-L-DV-A-S-K-TR

Pin	Description	Socket pin	Note
1	GND		
2	VCC SRC		12V
3	CSI_3_CLK_N	F45	
4	VCC SRC		12V
5	CSI_3_CLK_P	F46	
6	VCC SRC		12V
7	GND		
8	VCC SRC		12V
9	CSI_3_D1_N	G45	
10	VCC SRC		12V
11	CSI_3_D1_P	G44	
12	VDD_5V		
13	GND		
14	VDD_5V		
15	CSI_3_D0_N	E44	
16	VDD_5V		
17	CSI_3_D0_P	E45	
18	VDD_3.3V		
19	GND		
20	VDD_3.3V		
21	CSI_2_CLK_N	B42	
22	VDD_3.3V		
23	CSI_2_CLK_P	B43	
24	I2C_GP4_CLK	J61	1.8V
25	GND		
26	I2C_GP4_DAT	K61	1.8V
27	CSI_2_D1_N	C41	
28	UART1_TX	K53	
29	CSI_2_D1_N	C41	
30	UART1_RX	K54	
31	GND		
32	GND		
33	CSI_2_D0_N	A42	
34	CSI_5_D1_P	D46	
35	CSI_2_D0_P	A41	
36	CSI_5_D1_N	D45	
37	GND		
38	GND		
39	CSI_1_CLK_N	H42	

40	CSI_5_D0_P	D42	
41	CSI_1_CLK_P	H43	
42	CSI_5_D0_N	D43	
43	GND		
44	GND		
45	CSI_1_D1_N	J42	
46	CSI_5_CLK_P	C44	
47	CSI_1_D1_P	J41	
48	CSI_5_CLK_N	C45	
49	GND		
50	GND		
51	CSI_1_D0_N	G42	
52	CSI_4_D0_P	G48	
53	CSI_1_D0_N	G42	
54	CSI_4_D0_N	G47	
55	GND		
56	VDD_1V8		VDD_1V8
57	CSI_0_CLK_N	F42	
58	CSI_4_D1_P	E47	
59	CSI_0_CLK_P	F43	
60	CSI_4_D1_N	E48	
61	GND		
62	GND		
63	CSI_0_D1_N	E38	
64	CSI_4_CLK_P	F48	
65	CSI_0_D1_P	E39	
66	CSI_4_CLK_N	F49	
67	GND		
68	GND		
69	CSI_0_D0_N	E41	
70	NC		
71	CSI_0_D0_P	E42	
72	NC		
73	GND		
74	GPIO_EXP0_INT		Connected to J20 pin 79
75	CSI_7_CLK_N	B46	
76	GND		
77	CSI_7_CLK_P	B45	
78	I2C_GP3_CLK_PEX_LVS	F53	3.3V
79	GND		
80	I2C_GP3_DAT_PEX_LVS	E53	3.3V
81	CSI_7_D1_N	C48	
82	GND		
83	CSI_7_D1_P	C47	
84	CSI_6_CLK_N	J45	
85	GND		
86	CSI_6_CLK_P	J44	
87	CSI_7_D0_N	A45	

88	GND		
89	CSI_7_D0_P	A44	
90	CSI_6_D1_N	H45	
91	GND		
92	CSI_6_D1_P	H46	
93	I2C_SCL_GP5_3.3	A53	3.3V, also connected to J23 (6)
94	GND		
95	I2C_SDA_GP5_3.3	C53	3.3V, also connected to J23 (7)
96	CSI_6_D0_N	K43	
97	I2C_GP2_CLK_LVS	J61	3.3V
98	CSI_6_D0_P	K44	
99	I2C_GP2_DAT_LVS	K61	3.3V
100	GND		

5.23 J29 - USB 2.0

Pin	Description	Socket pin	Note
1	5V		
2	D-		Parallel to J17
3	D+		Parallel to J17
4	GND		

5.24 J31 - POWER OUT

JST-GH 1.25mm

Pin	Description	Socket pin	Note
1	PWR		DC IN
2	PWR		DC IN
3	12V		
4	12V		
5	12V		
6	GND		
7	GND		
8	GND		

5.25 J32 – USB(3)

JST-GH 1.25mm

Pin	Description	Socket pin	Note
1	5V		
2	D-		connected to USB 2.0 hub using USB2_D_N Socket pin A11
3	D+		connected to USB 2.0 hub using USB2_D_P Socket pin A10
4	GND		

5.26 J33 – USB(2)

JST-GH 1.25mm

Pin	Description	Socket pin	Note
1	5V		
2	D-		connected to USB 2.0 hub using USB2_D_N Socket pin A11
3	D+		connected to USB 2.0 hub using USB2_D_P Socket pin A10
4	GND		

5.27 J34 – USB(1)

JST-GH 1.25mm

Pin	Description	Socket pin	Note
1	5V		
2	D-		connected to USB 2.0 hub using USB2_D_N Socket pin A11
3	D+		connected to USB 2.0 hub using USB2_D_P Socket pin A10
4	GND		

5.28 J35 - POWER OUT

Pin	Description	Socket pin	Note
1	5V		
2	5V		
3	GND		
4	GND		

5.29 J36 - I2S2

JST-GH 1.25mm

Pin	Description	Socket pin	Note
1	1.8V		
2	SDIN	F6	
3	SDOUT	C7	
4	FS	E4	
5	CLK	G4	
6	GND		

5.1 RGB LED

Pin	Description	Socket pin	Note
LED-R	GPIO15_CAM1_PWDN	B8	
LED-G	GPIO16_CAM1_RST	F10	
LED-B	GPIO11_CODEC_INT	F9	

SECTION 6 FAQ

To be added.

SECTION 7 Disclaimer

Thank you for reading this manual. If you have found any typos or errors in this document, please let us know.
This is the preliminary version of this data sheet. Please treat all specifications with caution as there may be any typos or errors.

The Auvidea Team

SECTION 8 Copyright notice

Trademarks
NVIDIA, the NVIDIA logo, CUDA, Jetson, Maxwell, Tegra, Nano and VisionWorks are registered trademarks and/or trademarks of NVIDIA Corporation in the United States and other countries. Other company and product names may be trademarks of the respective companies with which they are associated.

SECTION 9 Appendix B [GPIO]

9.1 GPIO control

This example shows how to set and readout GPIO 414.
For different GPIO numbers replace 414 accordingly.

9.1.1 Export GPIO

```
nvidia@nvidia-desktop:~$ echo 414 > /sys/class/gpio/export
nvidia@nvidia-desktop:~$
```

9.1.2 Change direction to in

```
nvidia@nvidia-desktop:~$ echo in > /sys/class/gpio/gpio414/direction
nvidia@nvidia-desktop:~$
```

9.1.3 Change direction to out

```
nvidia@nvidia-desktop:~$ echo out > /sys/class/gpio/gpio414/direction
nvidia@nvidia-desktop:~$
```

9.1.4 Set GPIO low

```
nvidia@nvidia-desktop:~$ echo 0 > /sys/class/gpio/gpio414/value
nvidia@nvidia-desktop:~$
```

9.1.5 Set GPIO high

```
nvidia@nvidia-desktop:~$ echo 1 > /sys/class/gpio/gpio414/value
nvidia@nvidia-desktop:~$
```

9.1.6 Readout GPIO value

```
nvidia@nvidia-desktop:~$ cat /sys/class/gpio/gpio414/value
0
nvidia@nvidia-desktop:~$ cat /sys/class/gpio/gpio414/value
1
```

9.2 GPIO number reference sheet for AGX Xavier/Industrial

This sheet gives easy access to GPIO numbers used in the Linux environment.

Pin number (Socket Number)	AGX Xavier GPIOname	AGX Xavier GPIOnumber	AGX Xavier Pin direction	AGX Xavier Industrial GPIOname	AGX Xavier Industrial GPIOnumber	AGX Xavier Industrial Pin direction
A4	GPIO3_PJ.04	364	Bidirectional	GPIO3_PJ.04	364	Bidirectional
A5	GPIO3_PJ.01	361	Bidirectional	GPIO3_PJ.01	361	Bidirectional
A6	GPIO3_PFF.00	496	Output	GPIO3_PFF.00	496	Output
A7	GPIO3_PS.06	438	Input	GPIO3_PS.06	438	Input
A8	GPIO3_PL.02	378	Input	GPIO3_PL.02	378	Input
A54	GPIO3_PQ.01	417	Input	GPIO3_PQ.01	417	Input
A55	GPIO3_PP.06	414	Input	GPIO3_PP.06	414	Input
A56	GPIO3_PZ.04	492	Input	GPIO3_PZ.04	492	Input
A57	GPIO3_PX.07	479	Input	GPIO3_PX.07	479	Input
A58	GPIO3_PA.03	291	Output	GPIO3_PA.03	291	Output
A59	GPIO3_PA.01	289	Output	GPIO3_PAA.07	255	Bidirectional
A61	GPIO3_PEE.03	283	Input	GPIO3_PEE.03	283	Input
A62	GPIO3_PBB.02	258	Input	GPIO3_PBB.02	258	Input
B5	GPIO3_PE.00	320	Output	GPIO3_PE.00	320	Output
B6	GPIO3_PJ.00	360	Output	GPIO3_PJ.00	360	Output
B8	GPIO3_PS.05	437	Input	GPIO3_PS.05	437	Input
B9	GPIO3_PK.03	371	Output	GPIO3_PK.03	371	Output
B10	GPIO3_PL.03	379	Not Assigned	GPIO3_PL.03	379	Not Assigned
B54	GPIO3_PQ.03	419	Not Assigned	GPIO3_PQ.03	419	Not Assigned
B55	GPIO3_PQ.00	416	Input	GPIO3_PQ.00	416	Input
B56	GPIO3_PZ.07	495	Input	GPIO3_PZ.07	495	Input
B58	GPIO3_PA.00	288	Output	GPIO3_PA.00	288	Output
B59	GPIO3_PA.02	290	Input	GPIO3_PA.02	290	Input
B61	GPIO3_PAA.01	249	Input	GPIO3_PAA.01	249	Input
B62	GPIO3_PBB.00	256	Input	GPIO3_PBB.00	256	Input
C4	GPIO3_PE.06	326	Input	GPIO3_PE.06	326	Input
C5	GPIO3_PF.03	331	Input	GPIO3_PF.03	331	Input
C6	GPIO3_PFF.01	497	Output	GPIO3_PFF.01	497	Output
C7	GPIO3_PS.01	433	Output	GPIO3_PS.01	433	Output
C54	GPIO3_PP.05	413	Output	GPIO3_PP.05	413	Output
C55	GPIO3_PQ.04	420	Output	GPIO3_PQ.04	420	Output
C56	GPIO3_PX.05	477	Input	GPIO3_PX.05	477	Input
C57	GPIO3_PY.03	483	Not Assigned	GPIO3_PY.03	483	Not Assigned
C58	GPIO3_PX.04	476	Output	GPIO3_PX.04	476	Output
C59	GPIO3_PA.04	292	Bidirectional	GPIO3_PA.04	292	Bidirectional
C60	GPIO3_PA.07	295	Bidirectional	GPIO3_PA.07	295	Bidirectional
C61	GPIO3_PBB.01	257	Input	GPIO3_PBB.01	257	Input
D5	GPIO3_PF.02	330	Input	GPIO3_PF.02	330	Input
D6	GPIO3_PJ.05	365	Bidirectional	GPIO3_PJ.05	365	Bidirectional
D8	GPIO3_PS.03	435	Bidirectional	GPIO3_PS.03	435	Bidirectional
D9	GPIO3_PK.02	370	Bidirectional	GPIO3_PK.02	370	Bidirectional
D10	GPIO3_PK.01	369	Output	GPIO3_PK.01	369	Output
D54	GPIO3_PM.07	391	Output	GPIO3_PM.07	391	Output
D55	GPIO3_PZ.05	493	Input	GPIO3_PZ.05	493	Input
D56	GPIO3_PY.01	481	Output	GPIO3_PY.01	481	Output
D59	GPIO3_PAA.02	250	Input	GPIO3_PAA.02	250	Input
D60	GPIO3_PCC.03	267	Output	GPIO3_PCC.03	267	Output
D61	GPIO3_PDD.01	273	Bidirectional	GPIO3_PDD.01	273	Bidirectional
D62	GPIO3_PCC.01	265	Input	GPIO3_PCC.01	265	Input
E4	GPIO3_PI.02	354	Input	GPIO3_PI.02	354	Input
E5	GPIO3_PF.01	329	Input	GPIO3_PF.01	329	Input
E6	GPIO3_PF.05	333	Output	GPIO3_PF.05	333	Output
E7	GPIO3_PF.04	332	Bidirectional	GPIO3_PF.04	332	Bidirectional
E8	GPIO3_PJ.02	362	Bidirectional	GPIO3_PJ.02	362	Bidirectional
E10	GPIO3_PT.00	440	Input	GPIO3_PT.00	440	Input
E11	GPIO3_PK.00	368	Bidirectional	GPIO3_PK.00	368	Bidirectional
E53	GPIO3_PP.03	411	Bidirectional	GPIO3_PP.03	411	Bidirectional

E54	GPIO3_PQ.02	418	Input	GPIO3_PQ.02	418	Input
E55	GPIO3_PZ.06	494	Input	GPIO3_PZ.06	494	Input
E56	GPIO3_PY.04	484	Output	GPIO3_PY.04	484	Output
E59	GPIO3_PAA.05	253	Output	GPIO3_PAA.05	253	Output
E60	GPIO3_PDD.02	274	Bidirectional	GPIO3_PDD.02	274	Bidirectional
E61	GPIO3_PCC.00	264	Output	GPIO3_PCC.00	264	Output
F5	GPIO3_PI.00	352	Input	GPIO3_PI.00	352	Input
F6	GPIO3_PI.01	353	Input	GPIO3_PI.01	353	Input
F8	GPIO3_PJ.03	363	Bidirectional	GPIO3_PJ.03	363	Bidirectional
F9	GPIO3_PT.06	446	Output	GPIO3_PT.06	446	Output
F10	GPIO3_PT.05	445	Output	GPIO3_PT.05	445	Output
F53	GPIO3_PP.02	410	Bidirectional	GPIO3_PP.02	410	Bidirectional
F54	GPIO3_PZ.01	489	Output	GPIO3_PZ.01	489	Output
F55	GPIO3_PY.00	480	Not Assigned	GPIO3_PY.00	480	Not Assigned
F56	GPIO3_PN.00	392	Output	GPIO3_PN.00	392	Output
F58	GPIO3_PAA.03	251	Input	GPIO3_PAA.03	251	Input
F59	GPIO3_PAA.06	254	Input	GPIO3_PAA.06	254	Input
F60	GPIO3_PCC.02	266	Output	GPIO3_PCC.02	266	Output
F61	GPIO3_PEE.01	281	Not Assigned	GPIO3_PEE.01	281	Not Assigned
G4	GPIO3_PH.07	351	Input	GPIO3_PH.07	351	Input
G5	GPIO3_PE.02	322	Output	GPIO3_PE.02	322	Output
G6	GPIO3_PE.04	324	Output	GPIO3_PE.04	324	Output
G7	GPIO3_PT.03	443	Input	GPIO3_PT.03	443	Input
G8	GPIO3_PL.00	376	Bidirectional	GPIO3_PL.00	376	Bidirectional
G55	GPIO3_PZ.02	490	Output	GPIO3_PZ.02	490	Output
G56	GPIO3_PY.02	482	Output	GPIO3_PY.02	482	Output
G58	GPIO3_PX.06	478	Output	GPIO3_PX.06	478	Output
H5	GPIO3_PG.05	341	Output	GPIO3_PG.05	341	Output
H6	GPIO3_PF.00	328	Input	GPIO3_PF.00	328	Input
H8	GPIO3_PS.02	434	Input	GPIO3_PS.02	434	Input
H9	GPIO3_PS.04	436	Output	GPIO3_PS.04	436	Output
H51	GPIO3_PM.06	390	Output	GPIO3_PM.06	390	Output
H52	GPIO3_PN.01	393	Input	GPIO3_PN.01	393	Input
H53	GPIO3_PP.01	409	Output	GPIO3_PP.01	409	Output
H54	GPIO3_PR.05	429	Input	GPIO3_PR.05	429	Input
H55	GPIO3_PQ.05	421	Output	GPIO3_PQ.05	421	Output
H57	GPIO3_PZ.00	488	Input	GPIO3_PZ.00	488	Input
H58	GPIO3_PY.06	486	Input	GPIO3_PY.06	486	Input
H60	GPIO3_PEE.00	280	Input	GPIO3_PEE.00	280	Input
H61	GPIO3_PAA.00	248	Input	GPIO3_PAA.00	248	Input
H62	GPIO3_PCC.05	269	Output	GPIO3_PCC.05	269	Output
J4	GPIO3_PG.03	339	Input	GPIO3_PG.03	339	Input
J5	GPIO3_PG.04	340	Input	GPIO3_PG.04	340	Input
J6	GPIO3_PE.01	321	Output	GPIO3_PE.01	321	Output
J7	GPIO3_PE.03	323	Output	GPIO3_PE.03	323	Output
J9	GPIO3_PL.01	377	Output	GPIO3_PL.01	377	Output
J10	GPIO3_PK.06	374	Bidirectional	GPIO3_PK.06	374	Bidirectional
J11	GPIO3_PK.04	372	Bidirectional	GPIO3_PK.04	372	Bidirectional
J50	GPIO3_PM.04	388	Bidirectional	GPIO3_PM.04	388	Bidirectional
J51	GPIO3_PM.03	387	Output	GPIO3_PM.03	387	Output
J54	GPIO3_PP.00	408	Output	GPIO3_PP.00	408	Output
J55	GPIO3_PP.04	412	Not Assigned	GPIO3_PP.04	412	Not Assigned
J57	GPIO3_PZ.03	491	Input	GPIO3_PZ.03	491	Input
J58	GPIO3_PY.05	485	Output	GPIO3_PY.05	485	Output
J59	GPIO3_PA.06	294	Input	GPIO3_PA.06	294	Input
J61	GPIO3_PCC.07	271	Bidirectional	GPIO3_PCC.07	271	Bidirectional

9.3 How to calculate GPIOs

The above list should include every GPIO there is. This “how to” may help you find errors we did in our documentation ore to calculate GPIOs for upcoming models as the NVIDIA Jetson Orin.

9.3.1 GPIOnumber

The basic formular:

$$GPIOnumber = GPIOletter * 8 + GPIOdigit + GPIOoffset$$

9.3.2 GPIOletter

The GPIOletter is located between [GPIO3_P] and [.*digit*]

GPIOname	GPIOletter	GPIOletter (referenced)
GPIO3_PK.04	K	10 (for AGX Xavier)
GPIO3_PCC.07	CC	2 (for AGX Xavier)

This letter needs to be referenced to a number.
This number is individual to every Jetson module and can be found in the “tegra-gpio.h” (name may differ depending on module).
The Table is included at the end of this How to.

9.3.3 GPIOdigit

The GPIOdigit is easiest to get and can be extracted directly from the name.
GPIO3_PO.[GPIOdigit]

GPIOname	GPIOdigit
GPIO3_PK.04	4
GPIO3_PCC.07	7

9.3.4 GPIOoffset

The offset is connected to the GPIOletter. The same GPIOletter has always the same GPIOoffset for one specific module and only differs for AON cores.
The table for the Jetson AGX Xavier and AGX Xavier Industrial is shown later.

9.3.5 Example

Calculating GPIO number GPIO3_PK.04 for Jetson Xavier NX:

$$GPIOnumber = GPIOletter * 8 + GPIOdigit + GPIOoffset$$
$$GPIOnumber = 372 = 10 * 8 + 4 + 288$$

9.3.6 Table

Jetson AGX Xavier			
Alpha Key	**Value**	**Offset**	**Note**
A.	0	288	
B.	1	288	
C.	2	288	
D.	3	288	
E.	4	288	
F.	5	288	
G.	6	288	
H.	7	288	
I.	8	288	
J.	9	288	
K.	10	288	
L.	11	288	
M.	12	288	
N.	13	288	
O.	14	288	
P.	15	288	
Q.	16	288	
R.	17	288	
S.	18	288	
T.	19	288	
U.	20	288	
V.	21	288	
W.	22	288	
X.	23	288	
Y.	24	288	
Z.	25	288	
AA	0	248	AON GPIO
BB	1	248	AON GPIO
CC	2	248	AON GPIO
DD	3	248	AON GPIO
EE	4	248	AON GPIO
FF	26	288	
GG	27	288	

Jetson AGX Xavier Industrial			
Alpha Key	**Value**	**Offset**	**Note**
A.	0	288	
B.	1	288	
C.	2	288	
D.	3	288	
E.	4	288	
F.	5	288	
G.	6	288	
H.	7	288	
I.	8	288	
J.	9	288	
K.	10	288	
L.	11	288	
M.	12	288	
N.	13	288	
O.	14	288	
P.	15	288	
Q.	16	288	
R.	17	288	
S.	18	288	
T.	19	288	
U.	20	288	
V.	21	288	
W.	22	288	
X.	23	288	
Y.	24	288	
Z.	25	288	
AA	0	248	AON GPIO
BB	1	248	AON GPIO
CC	2	248	AON GPIO
DD	3	248	AON GPIO
EE	4	248	AON GPIO
FF	26	288	
GG	27	288	

a

SECTION 10 Appendix C [I2C]

10.1 I2C device bus

I2C Examples of configurations and how to use.

Bus	GEN1_I2C	GEN2_I2C	GEN3_I2C	CAM_I2C
Pins	185 and 187	189 and 191	232 and 234	213 and 215
Voltage (native)	3.3V	3.3V	1.8V	3.3V
Nano device				6
TX2 NX device	0			
Xavier NX device	1			2
Crypto chip		ATSHA204A		
CSI-2 camera	CSI-CD	CSI-E	CSI-F	CSI-AB
GPIO header	27 and 28	3 and 5		
EEPROM		24LC024		

10.2 I2C usage of devices and registers

10.2.1 List i2c devices on a specific bus

Syntax: i2cdetect [options] <busNr>

```
test@test-desktop:~$ i2cdetect -y -r 8
     0  1  2  3  4  5  6  7  8  9  a  b  c  d  e  f
00: -- -- -- -- -- -- -- -- -- -- -- -- --
10: -- -- -- -- -- -- -- -- -- -- -- -- -- -- -- --
20: -- -- -- -- -- -- -- -- -- -- -- -- -- -- -- --
30: -- -- -- -- -- -- -- -- -- -- -- -- -- -- -- --
40: -- -- -- -- -- -- -- -- -- -- -- -- -- -- -- --
50: -- -- -- -- -- -- -- -- -- -- -- -- -- -- -- --
60: -- -- -- -- -- -- -- -- -- -- -- -- -- -- -- --
70: -- -- -- -- -- -- 76 --
test@test-desktop:~$
```

10.2.2 Dump i2c device registers

Syntax: i2cdump [options] <busNr> <deviceAddress>

```
test@test-desktop:~$ i2cdump -y -f 8 0x76
No size specified (using byte-data access)
    0  1  2  3  4  5  6  7  8  9  a  b  c  d  e  f  0123456789abcdef
00: 00 00 ff ff 00 00 ff ff XX XX XX XX XX XX XX XX ........XXXXXXXX
10: XX XX XX XX XX XX XX XX XX XX XX XX XX XX XX XX XXXXXXXXXXXXXXXX
20: XX XX XX XX XX XX XX XX XX XX XX XX XX XX XX XX XXXXXXXXXXXXXXXX
...
d0: XX XX XX XX XX XX XX XX XX XX XX XX XX XX XX XX XXXXXXXXXXXXXXXX
e0: XX XX XX XX XX XX XX XX XX XX XX XX XX XX XX XX XXXXXXXXXXXXXXXX
f0: XX XX XX XX XX XX XX XX XX XX XX XX XX XX XX XX XXXXXXXXXXXXXXXX
test@test-desktop:~$
```

10.2.3 Set register value:

Syntax: i2cset [options] <busNr> <deviceAddress> <register> <address> <value>

```
test@test-desktop:~$ sudo i2cset -y -f 8 0x76 0x06 0x00
test@test-desktop:~$
```

10.2.4 Read register value:

Syntax: i2cget [options] <busNr> <deviceAddress> <register> <address>

```
test@test-desktop:~$ sudo i2cget -y -f 8 0x76 0x06
0x00
test@test-desktop:~$
```

10.2.5 Test IMX219 camera stream

The parameter `sensor-id=` describes the camera target. This id can be found by using `ls /dev/`. If the camera correctly plugged in then there should be a device called `/dev/videoX`, where X is the camera id.

```
test@test-desktop:~$ gst-launch-1.0 nvarguscamerasrc sensor-id=0 ! 'video/x-
raw(memory:NVMM), width=(int)1280, height=(int)720, format=(string)NV12,
framerate=(fraction)30/1' ! nvvidconv ! queue ! xvimagesink
```

SECTION 11 Appendix E [Wi-Fi]

This appendix describes how you can bring Wi-Fi functionality to one of Auvidea JN boards in case you did not choose one with Wi-Fi already integrated.
Please note that exclusively USB-only Wi-Fi cards are supported at the moment.
This excludes PCIe Wi-Fi cards from Intel ore other vendors.
Future development aims to also provide solutions for PCIe Wi-Fi cards.
Please contact Auvidea for custom solutions when needed.

11.1 Options from AUVIDEA

11.1.1 U100 Adapter

The U100 is an adapter board with four port USB 2.0 hub and 1x M.2 Key E slot for USB only Wi-Fi cards and M.2 Key B for LTE cards.
A version of U100 with already integrated LM823 Wi-Fi is available from Auvidea.

	U100	Note
Image	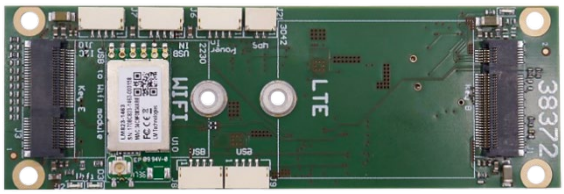	This adapter connects to the J8 connector as shown in “LM823 with cable” https://auvidea.eu/product/38372/

11.1.2 LM823 with cable

Simple solution to connect a LM823 (5V only!) module to the J8 connector.

	Setup example	Kabel + LM823-module
Image	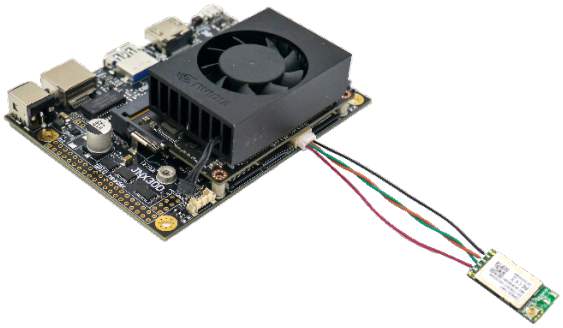	

Please contact Auvidea for samples.

11.1.3 38458 Wi-Fi card

	38458 Wi-Fi card	Note
	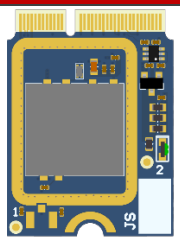	M.2 Key E Wi-Fi card with RTL8188 module.

Please contact Auvidea for samples.

11.1.4 38459 Wi-Fi card

	38459 Wi-Fi card	38459 Wi-Fi card	Note
	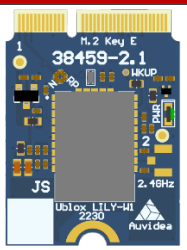		M.2 Key E Wi-Fi card with Ublox Lily W-131 module.

Please contact Auvidea for samples.

11.1.5 U101 Adapter

[in development] A simple adapter from internal USB connector to M.2. Enables the use of USB only Wi-Fi cards.
Please contact Auvidea for samples.

11.1.6 U102 Adapter

[in development] A simple adapter board for the LM823 module with 3.3V power for the 3.3V version of LM823.
Please contact Auvidea for samples.

11.2 Options from other sources

11.2.1 ST60-2230C-UU by Laird

The M.2 Key E ST60-2230C-UU by Laird is evaluated and validated from Auvidea. Can be installed in the U100 Adapter. Auvidea can provide this card. Please ask for a quote.

11.2.2 Further modules

Also, any M.2 USB only Wi-Fi cards should be compatible with the boards from Auvidea.
When using different modules then suggested you must conduct your own verification process.

11.3 DIY integration

This example shows the integration of LM823 Wi-Fi module into the JN30D (38488-2). Similar steps may be applicable to your product.
Please contact Auvidea for support if you have problems with different carrier boards.

You will need:

- LM823 Module (3.3V or 5V)
- Three beads (0201 0-Ohm)
- Soldering skills

11.3.1 Enable USB interface

The LM823 module when soldered to the appropriate bay is using the USB 2.0 lanes from the J8 USB connector. When performing this modification, the J8 USB port must not be used afterwards!

	Location marker	Note
USB-beads	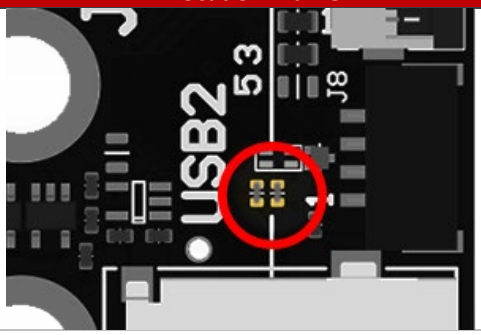	Solder two beads next to the J8 USB 2.0 connector (vertical orientation) to the location marked with the red circle. This will connect J8 to the LM823 solder pins.

11.3.2 Set voltage

On the underside pleas first set the appropriate voltage for your LM823 module.

	Location marker	Note
Voltage select	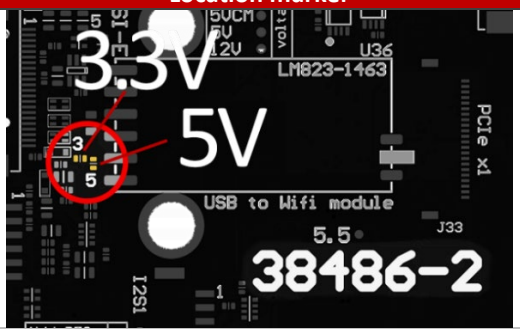	Soldering on a bead to ether the 3 (3.3V) ore 5 (5V) location as displayed in the picture. Please check your LM823 module needs.

11.3.3 Soldering on Module

	Location marker	Note
LM823 bay	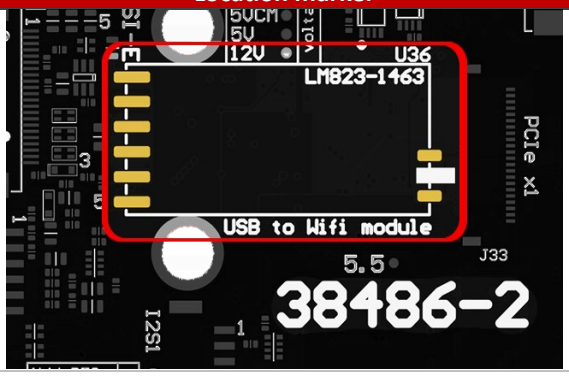	The LM823 module can be easily soldered to the pins.

11.3.4 Result

	Location marker	Note
Reference		After soldering on your module your result should look like displayed here. After connecting the antenna to the Wi-Fi module, you can start your system and test if it gets recognised.

11.4 Test Wi-Fi module connection

11.4.1 With GUI

You can check Wi-Fi functionality with the Ubuntu GUI

	Ubuntu	Note
Wi-Fi test		After installing a Wi-Fi module, it should be a visible network in the Ubuntu Network GUI.

11.4.2 Without GUI

USB devices can also be listed with lsusb:
Module is highlighted in red.

```
test@test-desktop:~$ lsusb
Bus 002 Device 001: ID 1d6b:0003 Linux Foundation 3.0 root hub
Bus 001 Device 003: ID 0bda:8179 Realtek Semiconductor Corp. RTL8188EUS 802.11n Wireless Network
Adapter <- LM module
Bus 001 Device 006: ID 1058:25a2 Western Digital Technologies, Inc.
Bus 001 Device 005: ID 04ca:007d Lite-On Technology Corp.
Bus 001 Device 004: ID 046d:c077 Logitech, Inc. M105 Optical Mouse
Bus 001 Device 002: ID 05e3:0608 Genesys Logic, Inc. Hub
Bus 001 Device 001: ID 1d6b:0002 Linux Foundation 2.0 root hub
test@test-desktop:~$
```

SECTION 12 END OF DOKUMENT

End of document